LiteML-Edge ESP32 Electrical Schematic

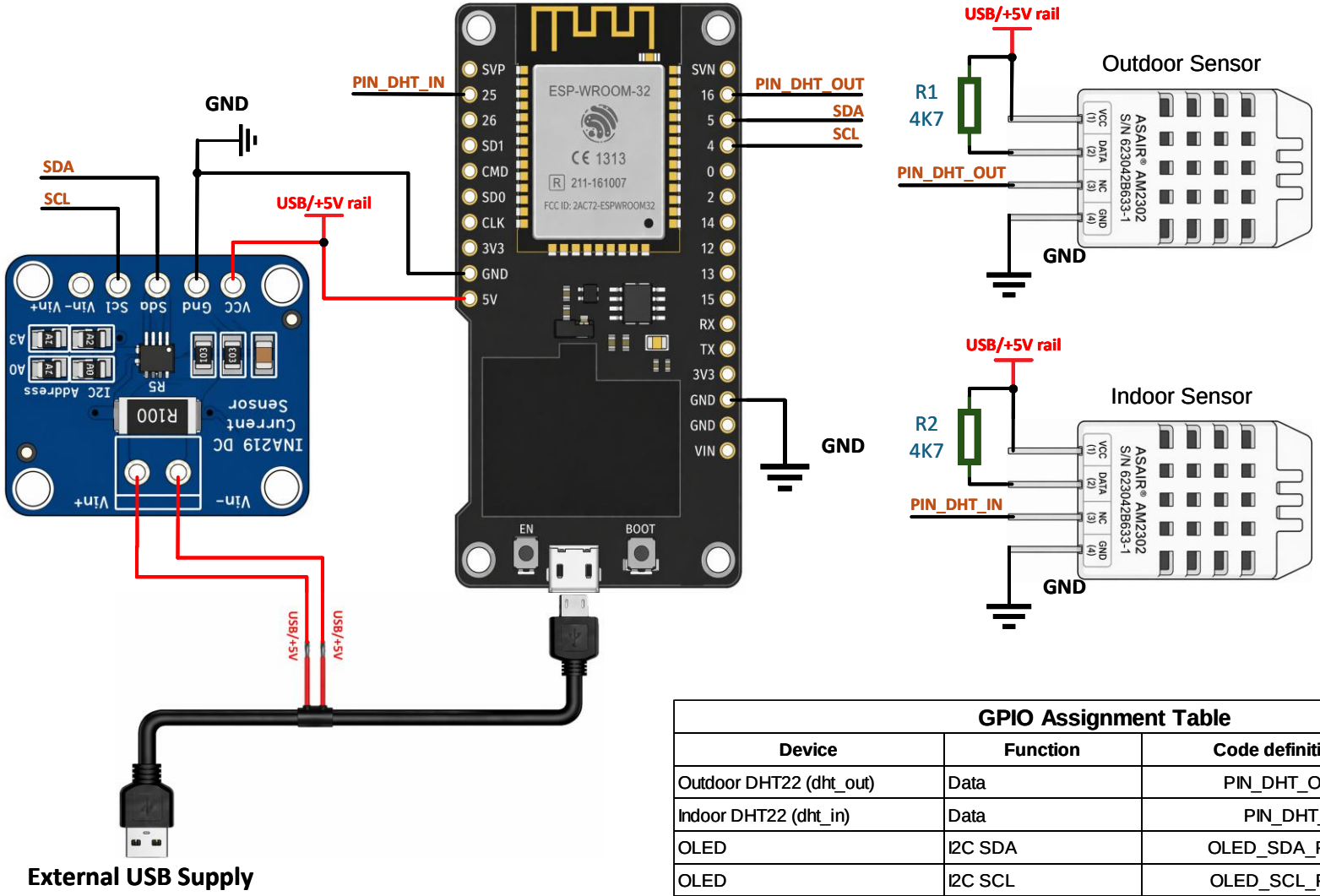

GPIO Assignment Table			
Device	**Function**	**Code definition**	**GPIO**
Outdoor DHT22 (dht_out)	Data	PIN_DHT_OUT	**16**
Indoor DHT22 (dht_in)	Data	PIN_DHT_IN	**25**
OLED	I2C SDA	OLED_SDA_PIN	**5**
OLED	I2C SCL	OLED_SCL_PIN	**4**
INA219	I2C SDA	Shared with OLED	**5**
INA219	I2C SCL	Shared with OLED	**4**